5300 Series

Cracking Pressure Tolerance: ±5%

Flow at cracking pressure: Gas = 5cc/min
Teflon® seals = 0.02 scfm

Reseal pressure

Crack Pressure	Reseal Pressures
400–599 psi	80% of C.P.
600–899 psi	85% of C.P.
900–5999 psi	90% of C.P.
6000 psi & greater	95% of C.P.

Leakage at reseal pressure

Gas	Ascending pressure = zero to 95% of cracking pressure
	Descending pressure = zero at reseal
Liquid	Ascending pressure = 5cc/min maximum to 95% of cracking pressure
	Descending pressure = 15cc/min maximum at reseal

Dimensions (inches)

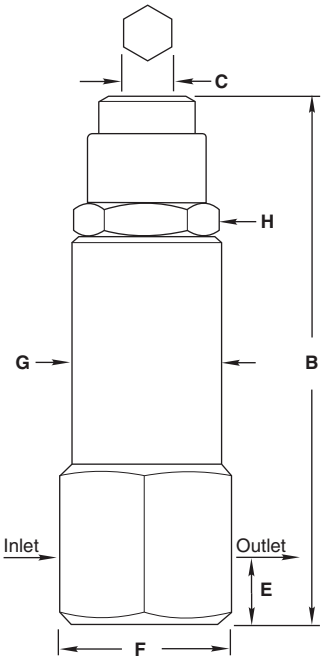

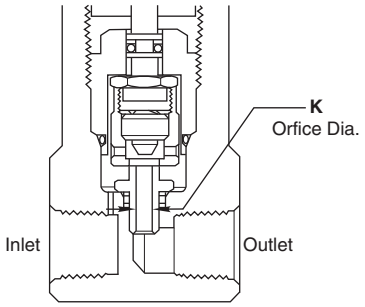

Tube Size	C.P. Range *(PSI)*	B Max.	C Hex	E	F Hex	G Dia.	H Hex	K Dia.	Weight *(lbs)* Brass	Weight *(lbs)* Stainless Steel
¼″, ⅜″	420–3074	4.88	½	0.52	1.63	1.38	1.25	0.125	1.6	1.5
	3075–10,500	5.78	⅜	0.52	1.63	1.38	1.25	0.125	1.8	1.7
½″	420–3074	4.88	½	0.70	1.88	1.38	1.25	0.125	1.6	1.5
	3075–10,500	5.78	⅜	0.70	1.88	1.38	1.25	0.125	1.8	1.7
¾″	400–2299	7.01	9⁄16	0.94	2.50	1.75	1.50	1.88	—	—
	2300–10,500	8.48	½	0.94	2.50	1.75	1.50	1.88	—	—
1″	400–2299	7.01	9⁄16	0.94	3.00	1.75	1.50	1.88	—	—
	2300–10,500	8.48	½	0.94	3.00	1.75	1.50	1.88	—	—

Pipe Size	C.P. Range *(PSI)*	B Max.	C Hex	E	F Hex	G Dia.	H Hex	K Dia.	Weight *(lbs)* Brass	Weight *(lbs)* Stainless Steel
¼″	420–3074	4.88	½	0.52	1.50	1.38	1.25	0.125	1.6	1.5
	3075–10,500	5.78	⅜	0.52	1.50	1.38	1.25	0.125	1.8	1.7
½″	400–2299	7.01	9⁄16	0.82	2.00	1.75	1.50	0.188	3.2	3.0
	2300–10,500	8.48	½	0.82	2.00	1.75	1.50	0.188	3.7	3.5