10 - GPM Size / 233 Element

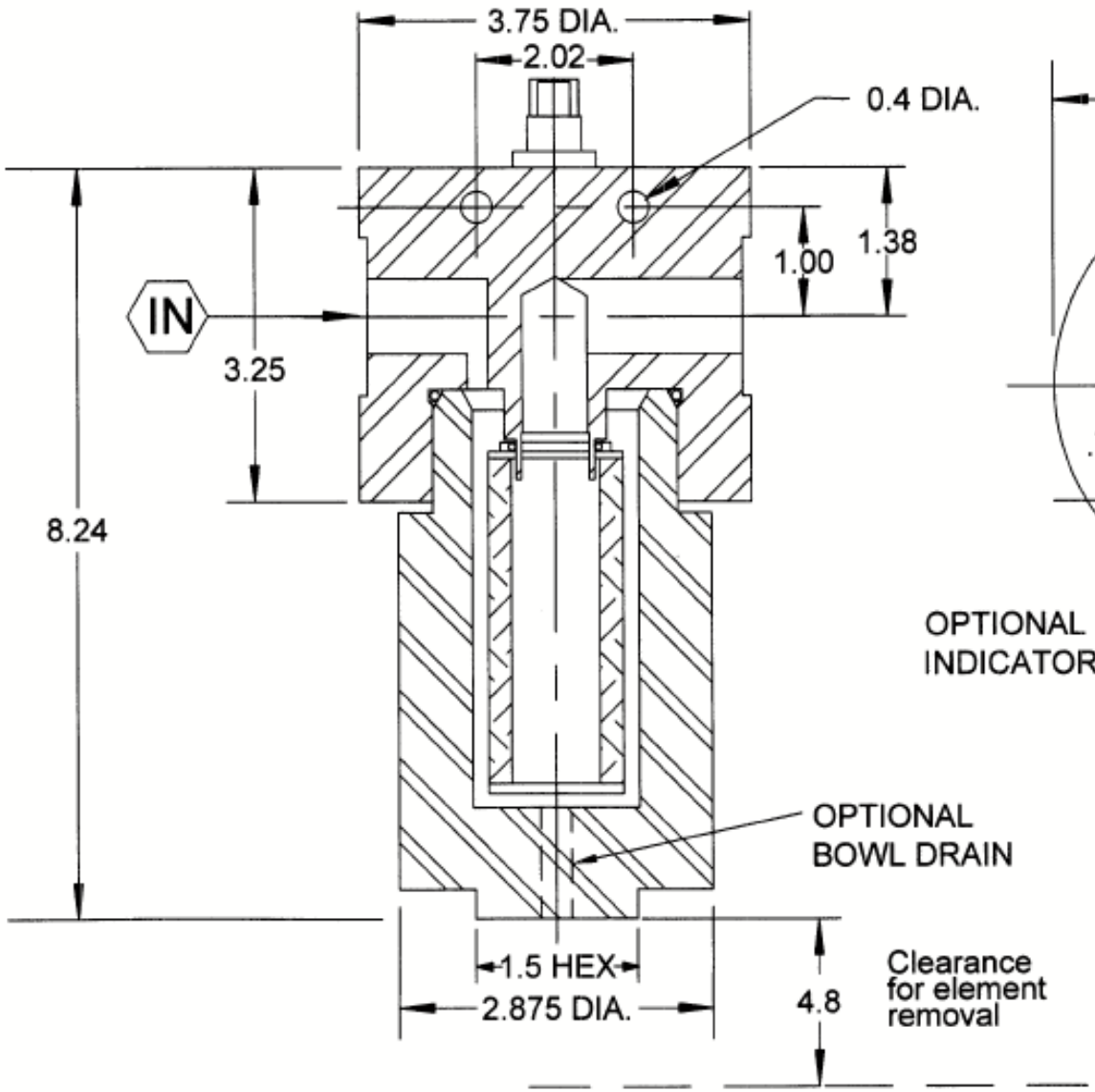

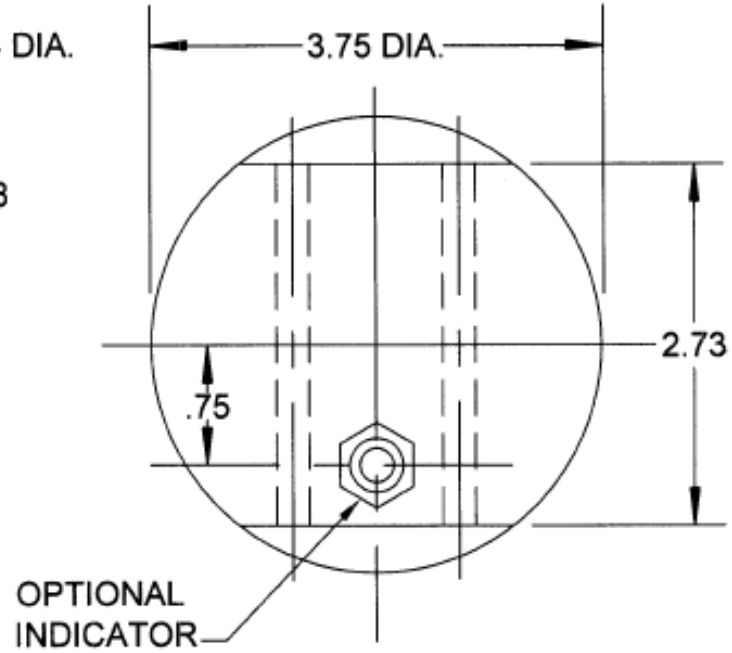

APPROXIMATE WEIGHTS

ALUMINUM - 4 LBS.

STAINLESS STEEL - 10 LBS.